Back

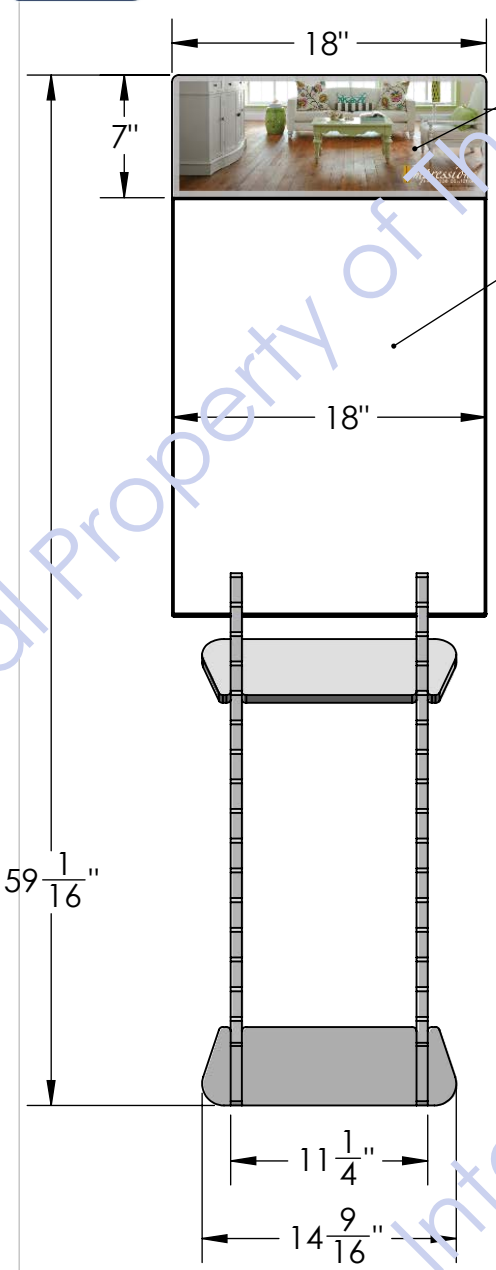

ThomasRECOM to apply full color litho

SAMPLE IS: 18" WIDE X 24" TALL

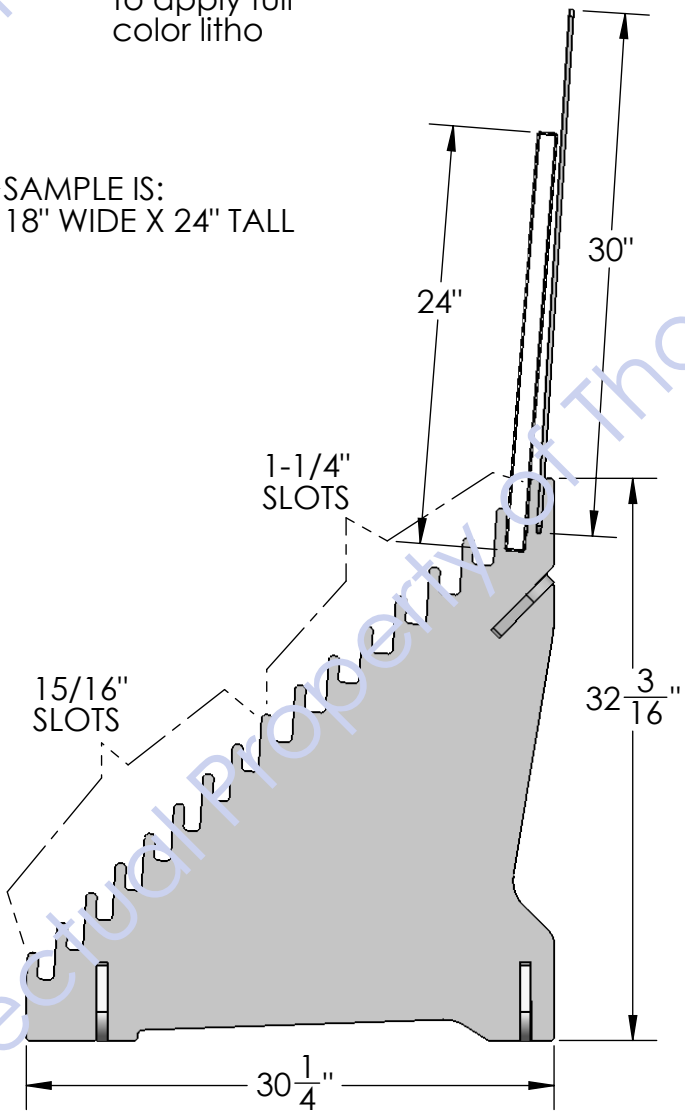

ALL BLACK DISPLAY AND HEADER

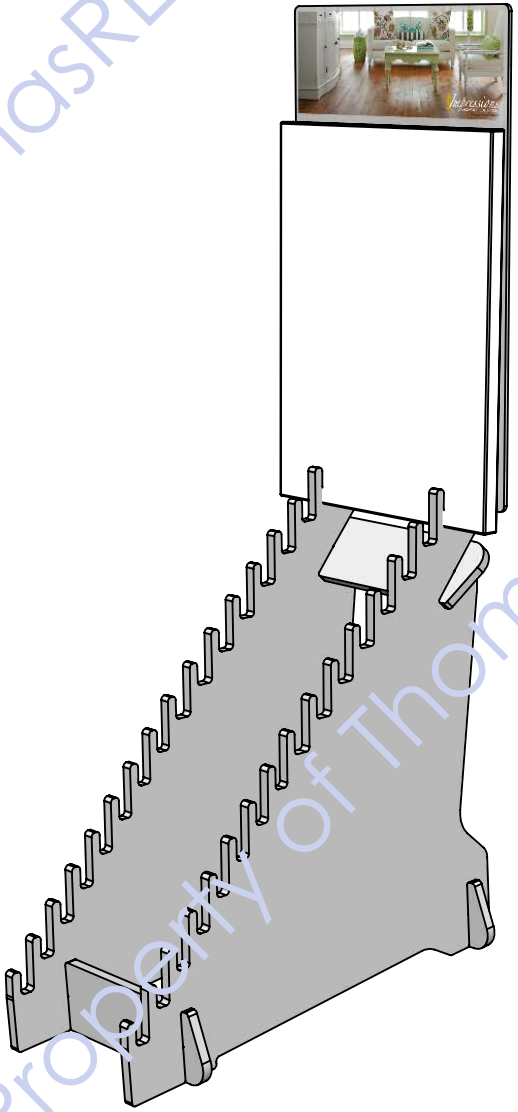

Intellectual Property of ThomasRECOM

THOMASRECOM
THE THOMAS RESEARCH COMPANY INC.
1-800-973-2660 WWW.ThomasRECOM.COM

DESC.: COMBO SLOT WATERFALL 15/16_1-1/4	PART#: 746	DATE: 4-12-17	SHEET 1 OF 3

Intellectual Property of ThomasRECOM

THE THOMAS RESEARCH COMPANY INC.
1-800-973-2660 WWW.ThomasRECOM.COM
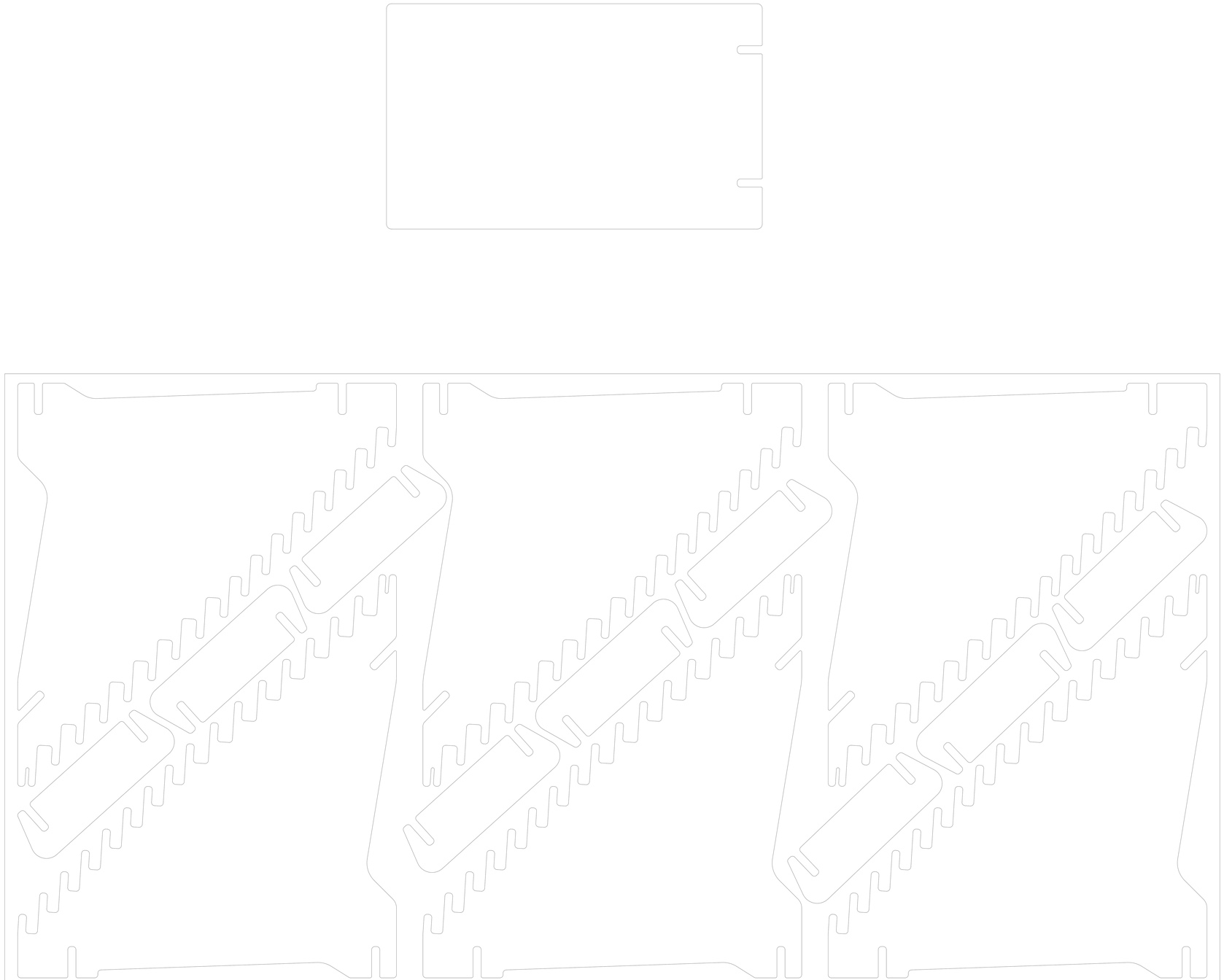
DESC.: COMBO SLOT WATERFALL 15/16_1-1/4	PART#: 746	DATE: 4-12-17	SHEET 2 OF 3