Back

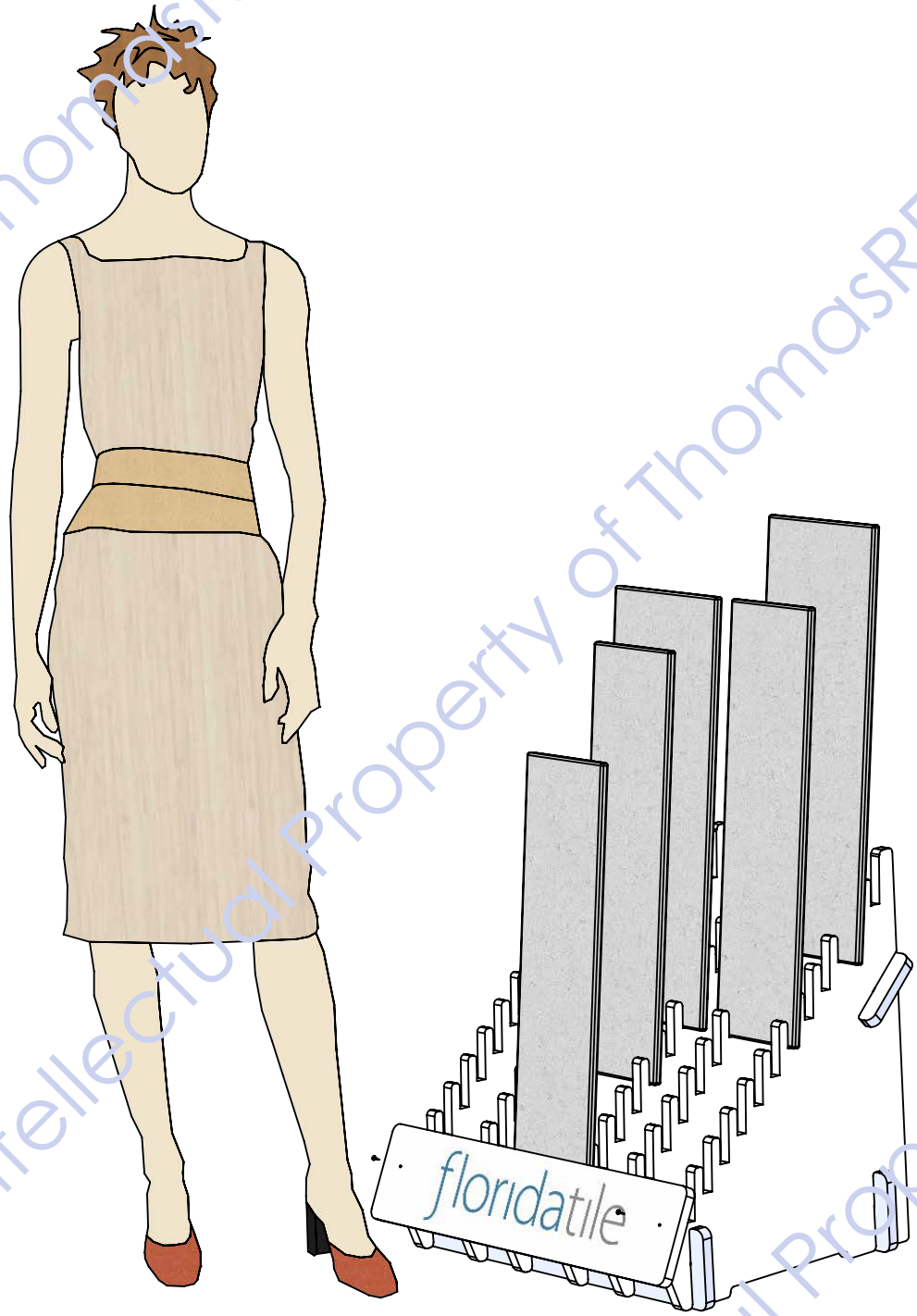

Intellectual Property of ThomasRECOM

THE THOMAS RECOM
THE THOMAS RESEARCH COMPANY INC.
1-800-973-2660 WWW.ThomasRECOM.COM

DESC.: TRIPLE 12 FT SOLID FRONT, WHITE	PART#: 1557	DATE: 4-16-24	SHEET 1 OF 2

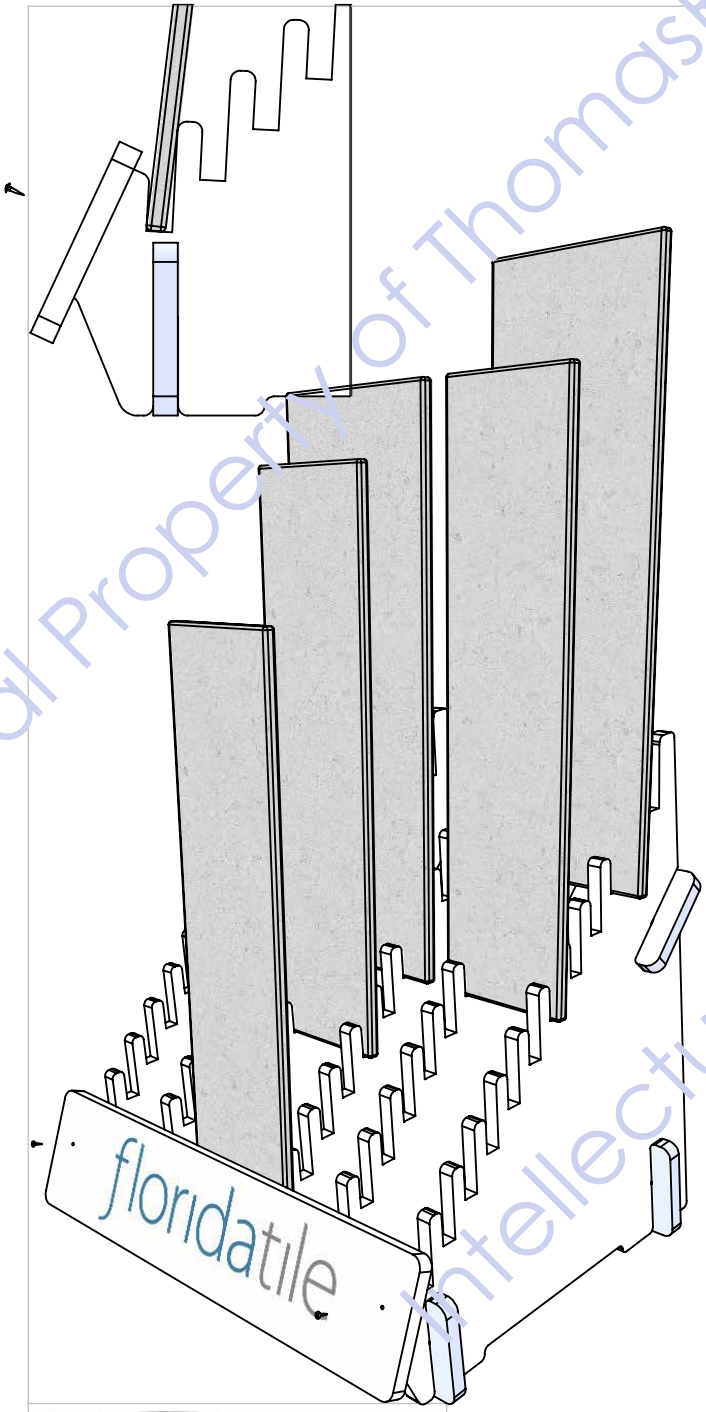

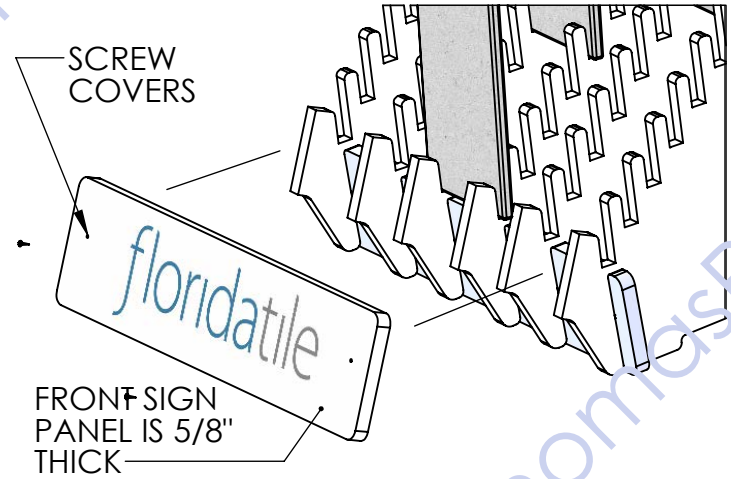

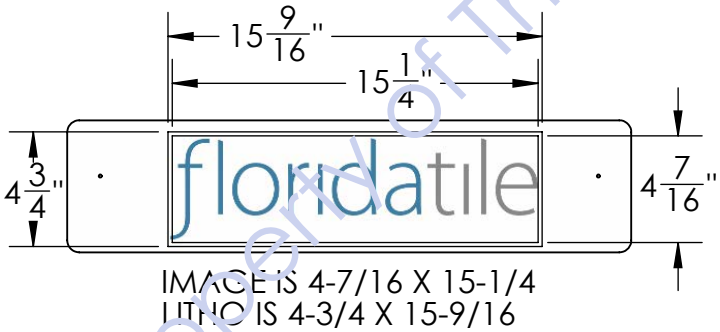

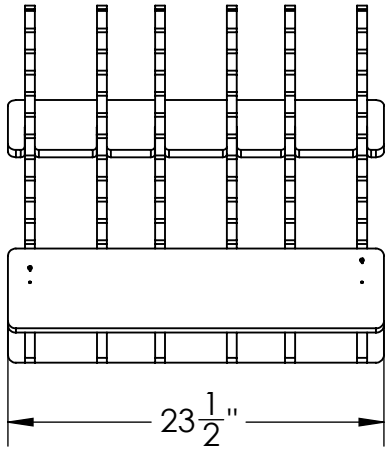

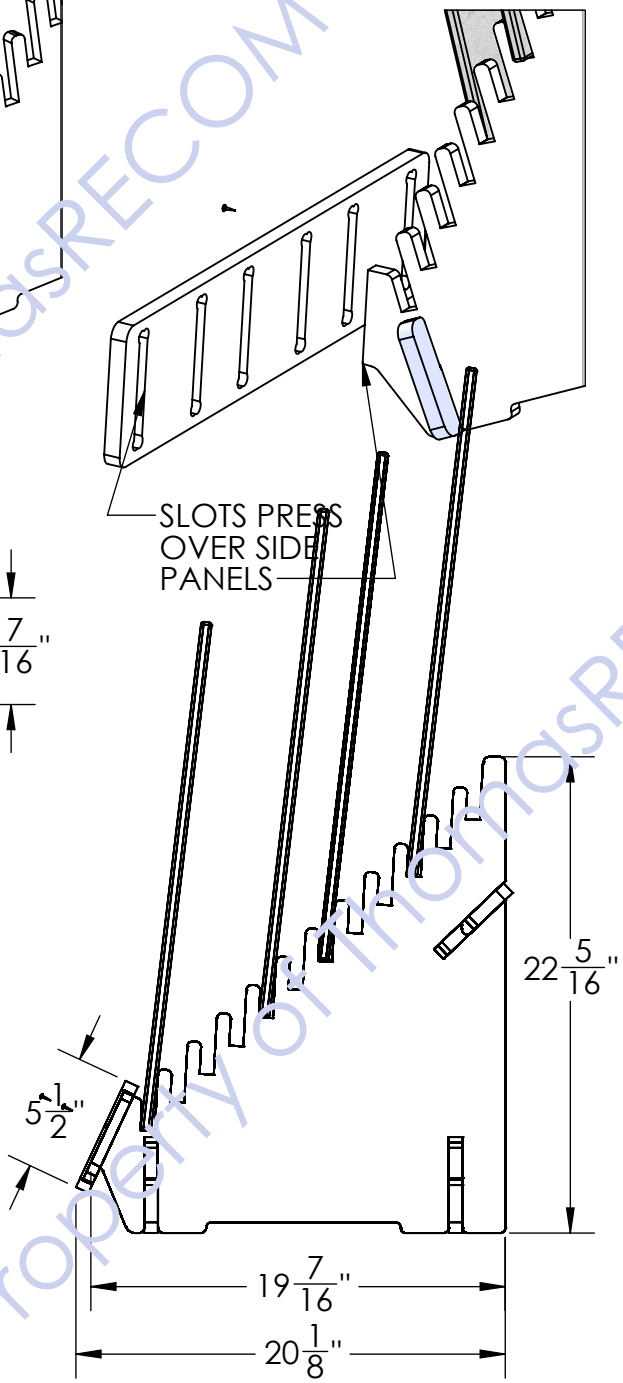

THOMAS RECOM
THE THOMAS RESEARCH COMPANY INC.
1-800-973-2660 WWW.ThomasRECOM.COM

DESC.: TRIPLE 12 FT SOLID FRONT, WHITE	PART#: 1557	DATE: 4-16-24	SHEET 2 OF 2

Intellectual Property of ThomasRECOM