Back

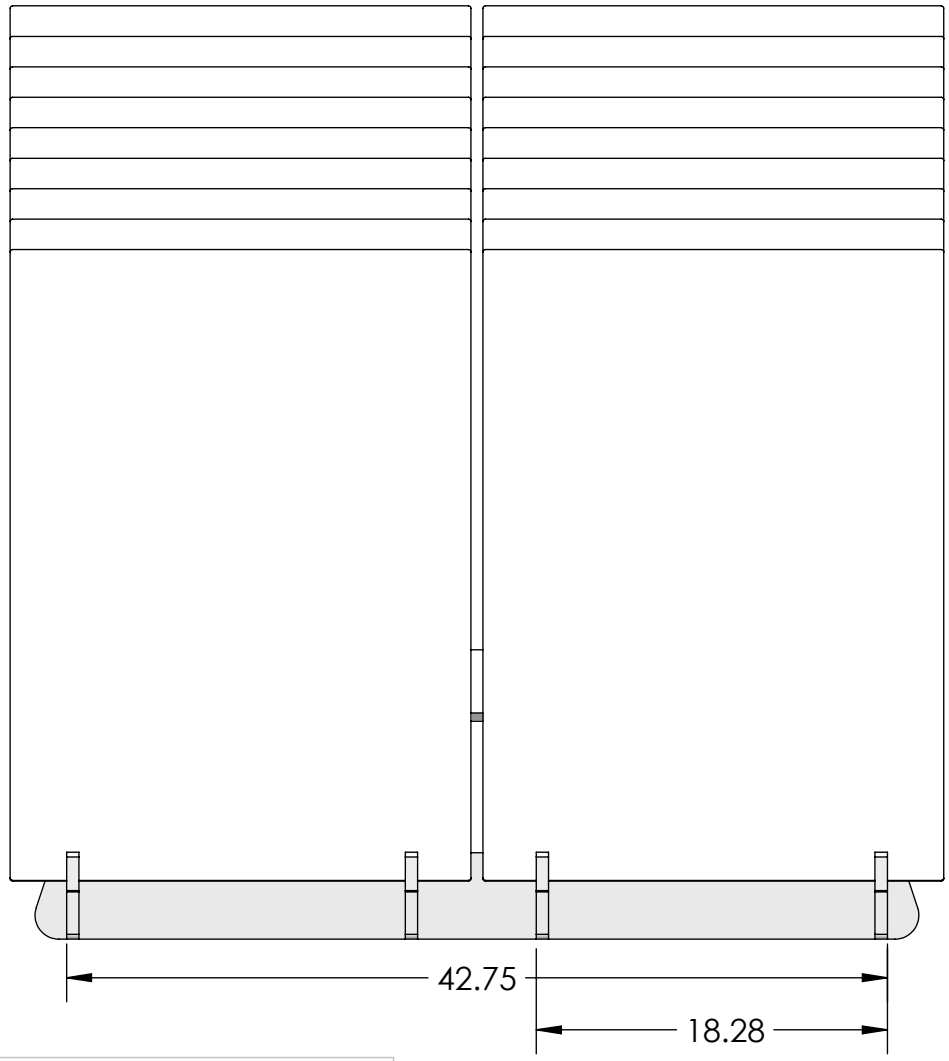

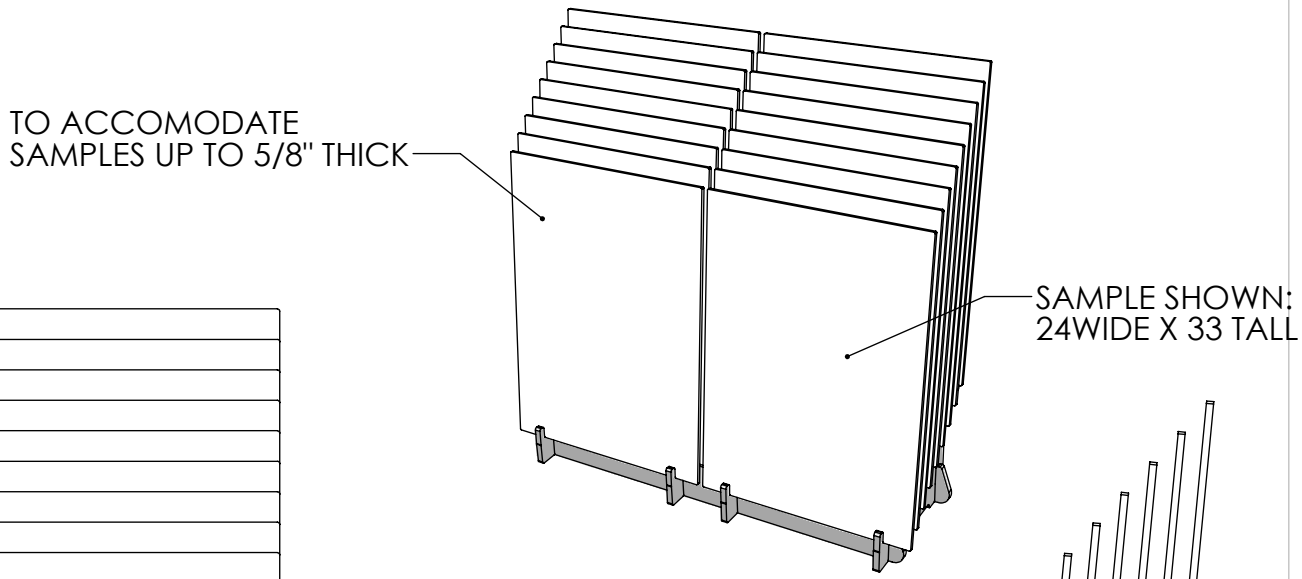

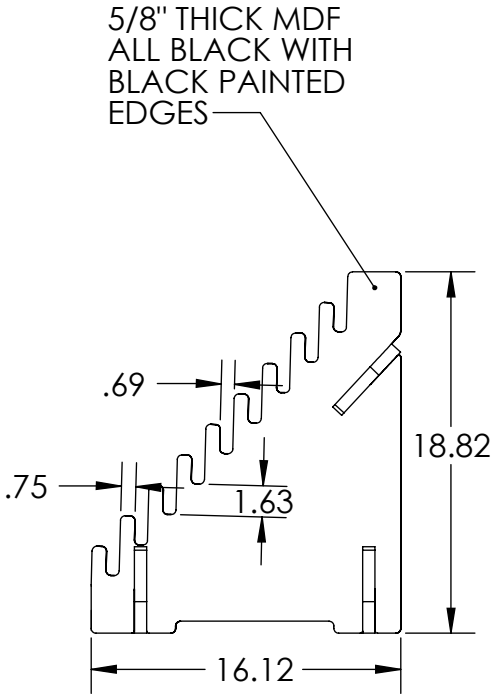

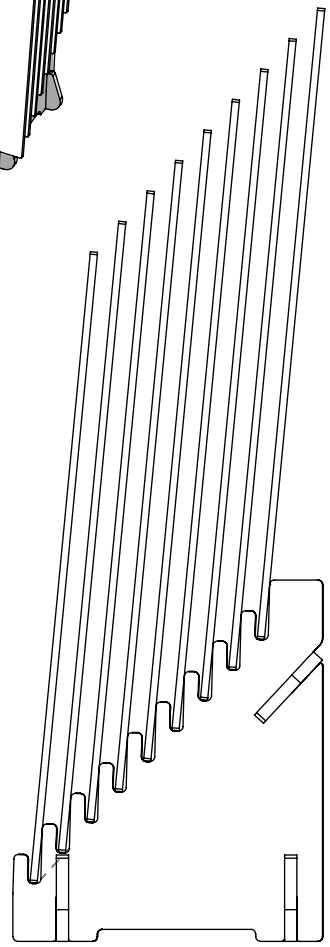

THE THOMAS RESEARCH COMPANY INC. 1-800-973-2660 WWW.ThomasRECOM.COM	DESC.: DOUBLE 9-COUNT	PART#: 788	DATE: 8-8-17	SHEET 1 OF 3

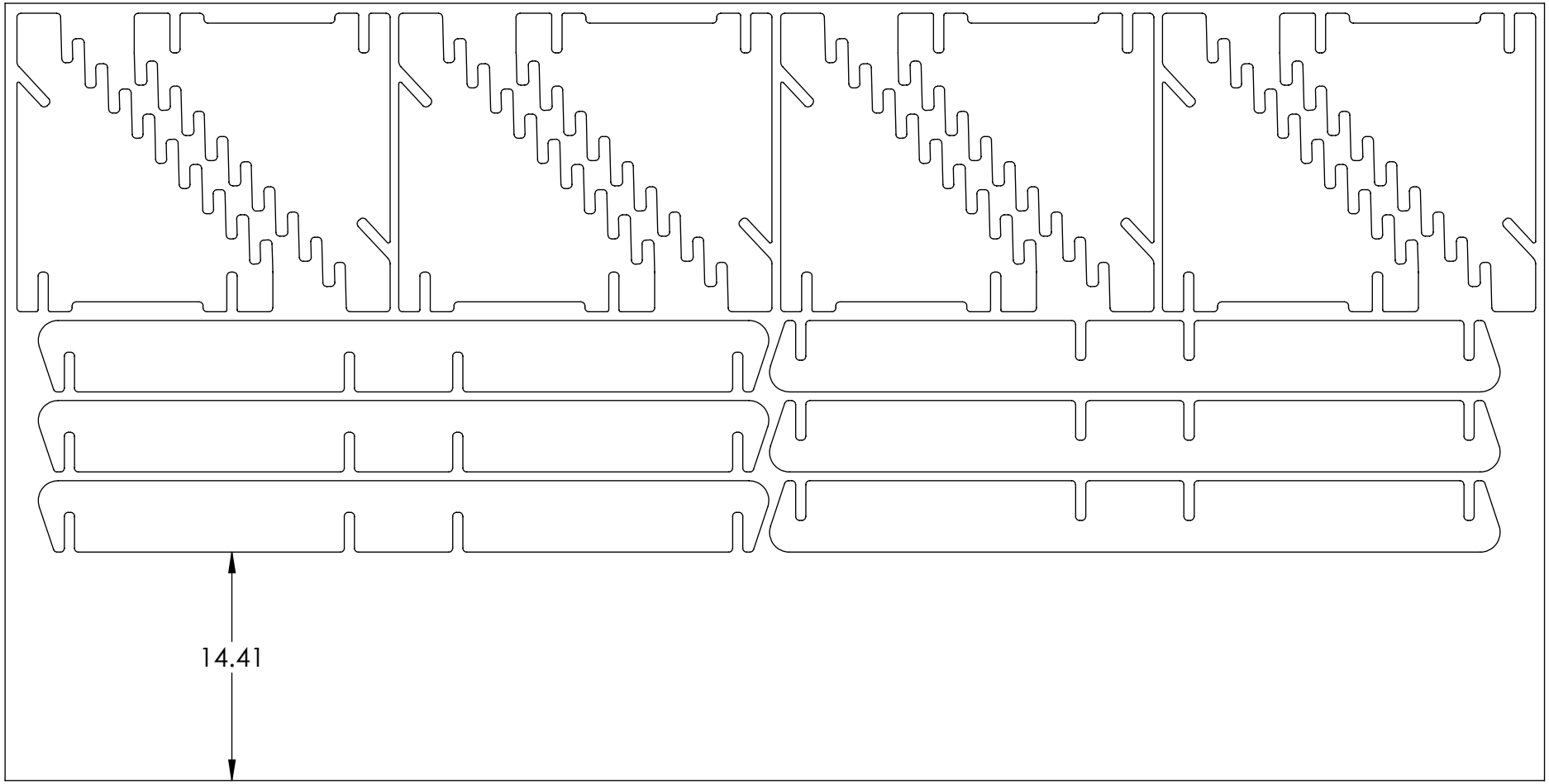

THE THOMAS RESEARCH COMPANY INC.
1-800-973-2660 WWW.ThomasRECOM.COM
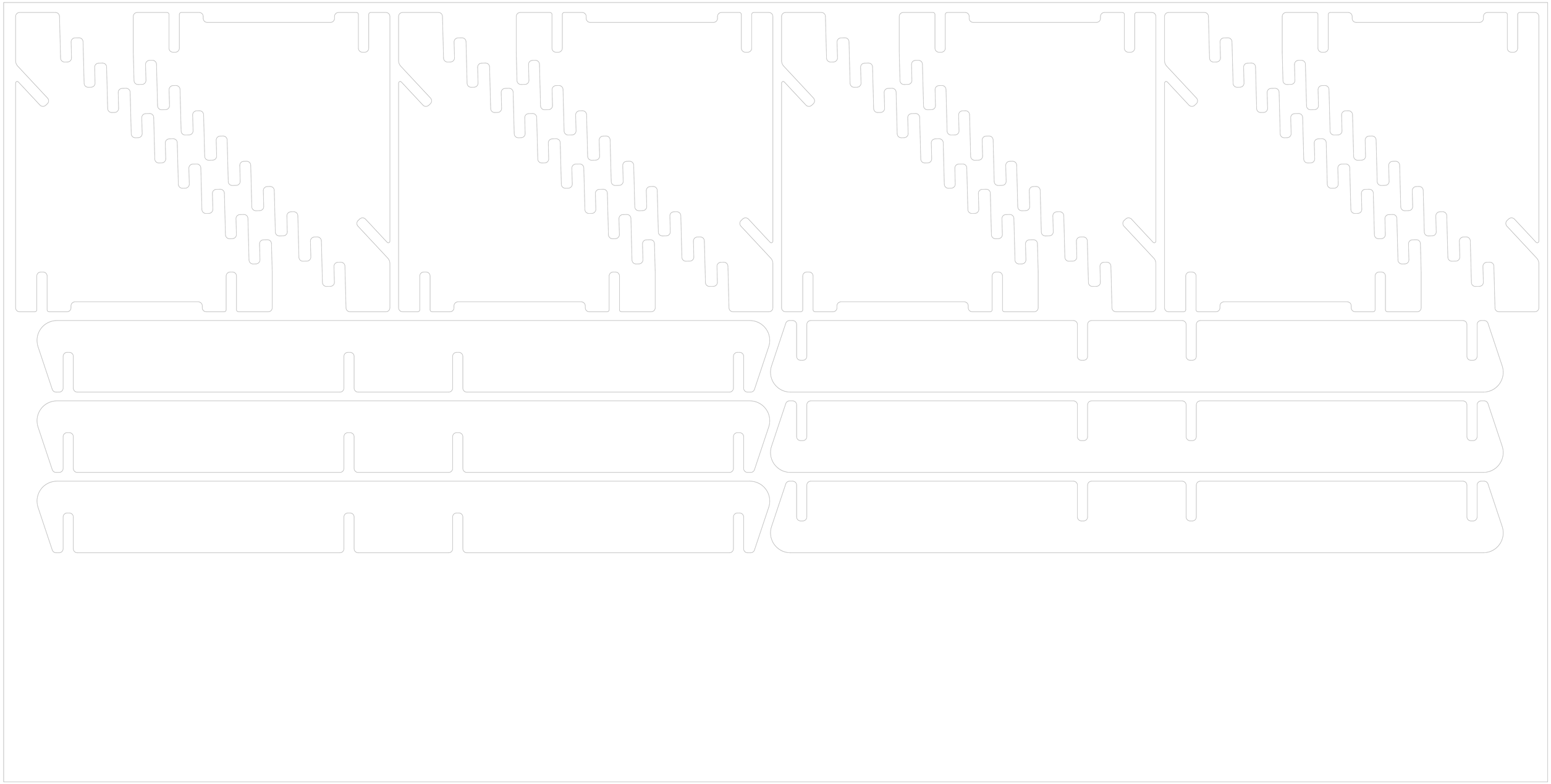
DESC.: DOUBLE 9-COUNT	PART#: 788	DATE: 8-8-17	SHEET 2 OF 3